L & T WET Kart Clutch Manual

The L & T Kart Clutches are intended to be used for karting purposes only, racing or otherwise. To insure that it performs correctly at all times, it must be installed, adjusted, and maintained properly. The following instructions will help you do just that.

A. PRINCIPAL OF OPERATION

The L & T Kart Clutch is unique in its operation, as can be seen by studying Fig. 1 because the centrifugal action on the weights pulls the clutch together rather than pressing the plates together as in a conventional cam clutch.

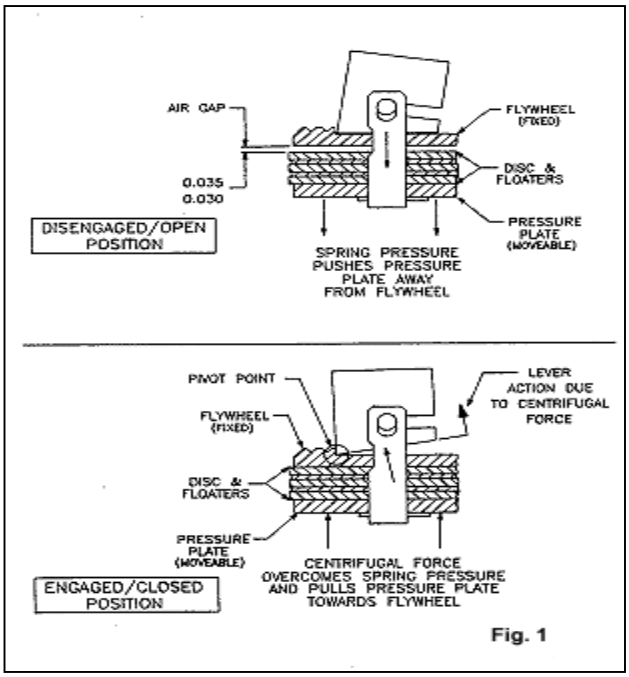

Fig. 1

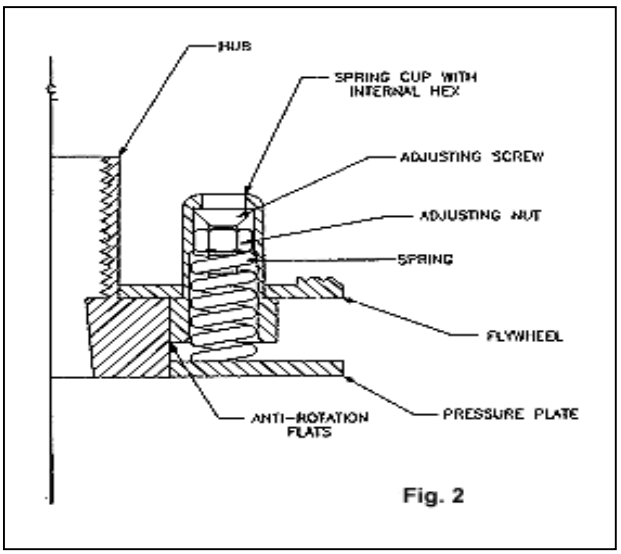

Fig. 2

The spring arrangement in Fig. 2 serves to provide the resistance necessary to get the correct stall speed by holding the clutch open until the weights overcome the spring pressure. By adjusting the spring pressure as shown in Fig. 3, it is possible to get more or less RPM (slip) as needed.

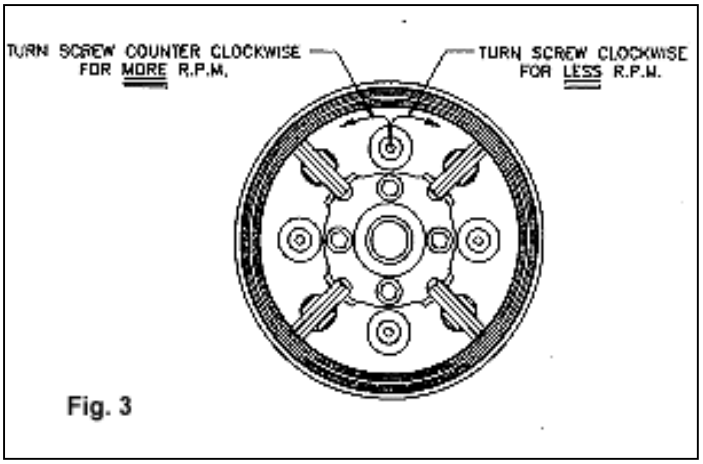

Fig. 3

CLUTCH INSTALLATION

1. Soak clutch in oil for at least one hour; overnight if possible.

2. Hand lap clutch hub to crankshaft. This step is an absolute must. The correct lapping compound for this operation has been included with your clutch. Make sure the spark plug is in place to keep the crankshaft from turning. (Hold crankshaft with taped plier jaws if necessary). Apply a small amount of compound to the taper on the crankshaft, then place the tapered hub over the end of the crankshaft and push and twist, first clockwise then counterclockwise, then lift, rotate the clutch and push and turn some more. Continue until both surfaces are 100% seated. After the lapping is completed, clean up all traces of the compound from both surfaces.

3. Check crankshaft key tolerance. Due to manufacturing tolerances it is possible that the crankshaft key may be too tall to allow the clutch hub to fully seat on the taper of the crankshaft. If you find this condition, file some material off of the top of the key until the clutch seats properly. Once you have the clutch seating properly, remove it from the crankshaft and begin installation.

4. First install spacer onto crankshaft with chamfered side towards the engine.

5. Place some clutch oil on the drum bushing and slide the drum onto the crankshaft.

6. Install key into crankshaft.

7. Slide clutch onto the crankshaft, making sure that the hub keyway and friction disc ears are lined up correctly. The disc ears must be aligned with the small grooves in the drum.

8. Check and, if necessary, clean the threads on the crankshaft and starter nut. Using red loctite, install the starter nut and tighten to about 25 foot pounds. Use a 1" end wrench to hold the special installation tool (L&T Part # 200-18 provided with all new wet clutches) to prevent the crankshaft from turning when tightening the starter nut.
9. Check the side clearance (end play) between the sprocket and spacer (Fig. 4). It is important that there be some clearance, too much is better than not enough. Grind the spacer if necessary, or replace it with another one of the correct size.

10. Place the special reusable gasket on the clutch cover and line up all the holes. Put one of the six small bolts through the cover and gasket and position into place.

11. Insert the remaining five bolts and tighten all six bolts, no nuts are necessary as the drum has built-in threads.

12. Spin the cover and drum by hand. If any binding occurs, repeat step 9.

13. Remove one filler plug and fill clutch as per Fig. 5 with L & T oil. When the oil is at the correct level, replace the plug.

14. Install the third bearing support and safety wire the bolt heads. Depending on the type of third bearing support, it may be necessary to cut or notch it to get at the filler plug. Check the clearance between the filler plug and third bearing support and add spacers if necessary (Fig.4).

15. Install chain and adjust tension.

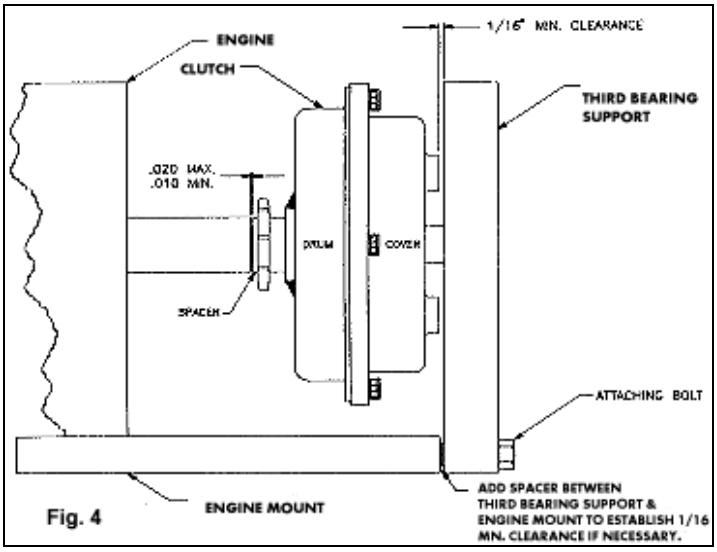

Fig. 4

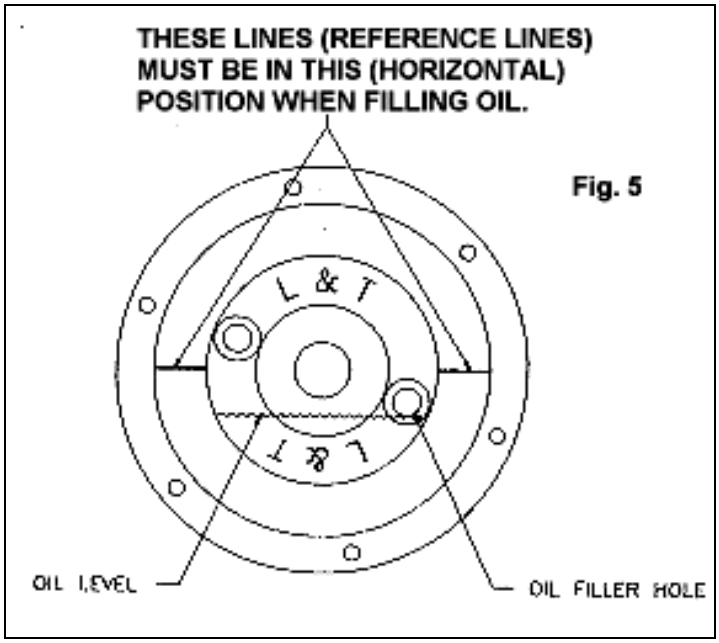

Fig. 5

C. CLUTCH ADJUSTMENT

1. Each clutch is preset with the springs at one turn of preload. This can be checked by inserting a 3/32(.093) Allen wrench into the spring adjusting screw and turning it clockwise until it feels "free" (neutral position).

At the same time watch the movement of the nut through the holes in the spring cup. Run the clutch at the one turn setting for 3 to 5 laps. If your kart is equipped with a tachometer, you may want to make an adjustment if necessary, after the break-in period to get the exact RPM needed.

2 RPM (slip) adjustments (Fig. 3)
Rotate filler plugs to 12 and 6 o/clock position and remove upper filler plug. To get more slip, the spring preload must be increased. **THIS IS DONE BY TURNING THE ADJUSTMENT SCREWS <u>COUNTERCLOCKWISE</u>.**

3. **TO GET LESS SLIP, LOWER THE SPRING PRELOAD BY TURNING THE ADJUSTMENT SCREWS <u>CLOCKWISE</u>.**

4. The maximum number of turns is three. Any more than that will damage the springs. A 1/2 turn will change the RPM by approximately 500 RPM.

D. AIR GAP CLEARANCE

Each clutch is carefully inspected for the correct air gap clearance before it is sold. The correct clearance is 0.030 to 0.035. If the friction disc becomes worn and the air gap gets over 0.035, shims can be installed as per Fig. 6 to maintain the correct air gap. To install the shim, squeeze the flywheel and pressure plate together with a pair of pliers and slide the shim into place. Make sure that the head of the shim is towards the inside of the clutch, otherwise centrifugal force will pull them out of place. After inserting the shims in each lever strap, look at the weights and lever strap pins to make sure that they are in the right position. The weights must be out against the lip of the flywheel and the pins must be all the way up into the lever strap hole. (Fig. 7)

E. MAINTENANCE

During the day you may change the clutch oil as often as you want. You must change the oil when your day is over. It may be necessary to tip the kart on its side to get out all the old oil if the cover is not removed.

<u>Every time</u> the kart is brought off the track

1. Check the clutch oil level. See Fig. 5
2. Lubricate the chain

<u>Every other</u> race day the clutch should be removed and inspected. A special tool (L&T Part # 200-22) is needed to take the clutch apart and to put it back together. This tool is available from the dealer that sold you your clutch.

Clutch inspection procedure:

- Check air gap.
- Check pressure plate for warpage, if only slightly warped it can be turned over and used again. If warpage exceeds 0.010, replace pressure plate.
- Check for broken springs.
- Check floaters for warpage.
- Check friction disc. If they measure less than 0.085, they should be replaced.
- Check lever pins for wear marks, grooves, and chipped ends. It is suggested that all lever pins be replaced after every 3-4 events.
- Check for wear on drum sprocket and bushing.

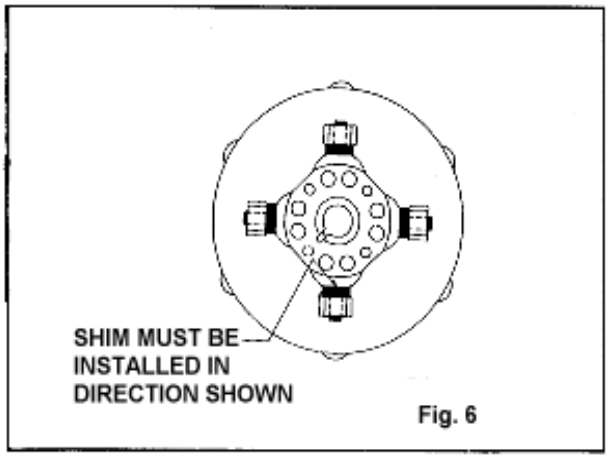

Fig. 6

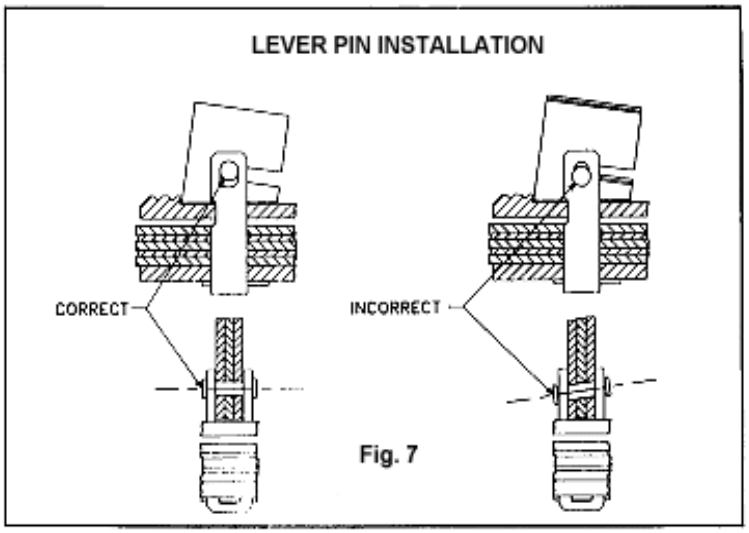

Fig. 7

L&T MANUFACTURING, INC.	KART CLUTCH PARTS LIST		
REFERENCE NO.	PART NAME	PART NO.	NO. REQUIRED
1	Starter nut 10mm x 1.25 thd.	100-40	1
2	Filler plug 1/16 N.P.T	200-15	2
3	Aluminum cover	100-10	1
4	Cover Bearing	200-16	1
5	Cover gasket	100-11	1
6	Cover snap ring	200-17	1
7	Lever support	100-14	1
8	Lever weight	100-12-3	12
9	Flywheel	100-28	1
10	Hub - 20° taper	100-30-3	1
11	Friction disc	100-17	3
12	Floater - .045 thick	100-20A	2
13	Pressure plate	100-25	1
14	Lever strap pin	100-13	4
15	Lever strap	100-16-3	4
16	Shim, optional, .010 thick Shim, optional, .005 thick	100-23 100-24	4 4
17	Drum - 9T - #35 chain Drum - 11T - #219 chain	100-38-3 100-39-3	1 1
18	Spacer - .720 O.D. x .105 wide	100-34	1
19	Cover screw - 8/32 x 3/8 long	200-12	6
20	Hub screw - 8/32 x 1/2 long	200-19	4
21	Spring cup	100-27-3	4
22	Spring adjuster screw F.H. 8/32 x 1/2 long	200-14	4
23	Spring adjuster nut 8/32	200-13	4
24	Spring	100-22-3	4
25	Crankshaft key 3mm	200-20	1

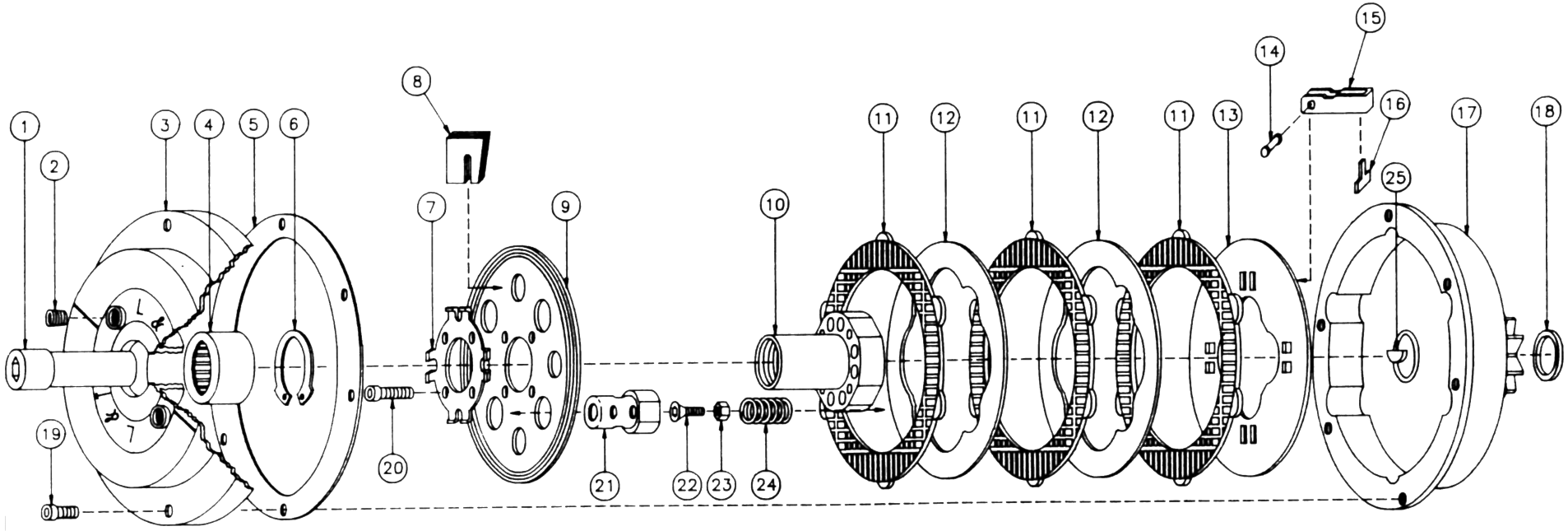
1
2
3
4
5
6
7
8
9
10
11
12
11
12
11
13
14
15
16
17
18
19
20
21
22
23
24
25
L
R
R
L

L&T Manufacturing, Inc.
801-C Factory Rd
Dayton, OH 45434

Phone: 937-429-3500
Fax: 937-429-3510
www.ltmfg.com